Installing Photovoltaic Systems

A Question and Answer Guide for Solar Electric Systems

Florida Solar Energy Center

May 1999

Table of Contents

1. INTRODUCTION 2

2. FUNDAMENTALS OF PHOTOVOLTAIC TECHNOLOGY 2

3. PHOTOVOLTAIC SYSTEMS AND EQUIPMENT 5

4. PLANNING A PHOTOVOLTAIC SYSTEM INSTALLATION 9

5. SITE SURVEY AND RESOURCE ASSESSMENT 11

6. PERFORMANCE EXPECTATIONS FOR PHOTOVOLTAIC SYSTEMS 13

7. SYSTEM COMMISSIONING, INSPECTION AND OPERATION 15

List of Figures

FIGURE 1. DIAGRAM OF PHOTOVOLTAIC CELL. 2
FIGURE 2. PHOTOVOLTAIC CELLS, MODULES, PANELS AND ARRAYS. 3
FIGURE 3. PHOTOVOLTAIC SYSTEM COMPONENTS. 6
FIGURE 4. DIAGRAM OF GRID-CONNECTED PHOTOVOLTAIC SYSTEM. 7
FIGURE 5. DIAGRAM OF STAND-ALONE PV SYSTEM WITH BATTERY STORAGE POWERING DC AND AC LOADS. 7
FIGURE 6. DIAGRAM OF PHOTOVOLTAIC HYBRID SYSTEM. 7
FIGURE 7. DIRECT-COUPLED PV SYSTEM. 8
FIGURE 8. DIAGRAM OF GRID-CONNECTED CRITICAL POWER SUPPLY SYSTEM. 8
FIGURE 9. RELATIONSHIP BETWEEN SOLAR IRRADIANCE AND INSOLATION. 12

Disclaimer

Neither the Florida Solar Energy Center nor any of its employees, makes any warranty expressed or implied, or assumes any legal liability or responsibility for the accuracy, completeness or application of any information contained in this document. Reference herein to any specific commercial product, process or service by trade name, trademark, manufacturer or otherwise does not necessarily constitute or imply its endorsement, recommendation or favoring by the Florida Solar Energy Center.

1. Introduction

This ***Question and Answer Guide for Solar Electric Systems*** addresses general considerations about photovoltaics (PV) technology and requirements for *installing photovoltaic power systems*, including building-integrated applications. Contained in this guide are commonly asked questions about the technology, and responses based on current state-of-the-art equipment and industry design practice.

This document covers fundamentals of photovoltaic cells, modules and arrays, as well as identification of common system configurations, operational strategies and major components. Considerations for installing PV systems, including site surveys, solar radiation resource assessment, and electrical and mechanical design strategies are also discussed. Finally, general requirements for inspecting, commissioning testing and maintaining PV system installations are presented.

This is not intended as an installation manual or design guide for untrained or unqualified persons. Individuals desiring to purchase and install PV systems are encouraged to contract with a knowledgeable and qualified member of the PV industry to safely and successfully complete system installations.

2. Fundamentals of Photovoltaic Technology

Q. What are Photovoltaics (PV)?

A. *Photovoltaic (PV) - or solar cells* as they are often referred to, are semiconductor devices that convert sunlight into direct-current (DC) electricity. A typical silicon PV cell is a thin wafer consisting of an ultra-thin layer of phosphorus-doped (N-type) silicon on top of a thicker layer of boron-doped (P-type) silicon. An electrical field is created near the top surface of the cell where these two materials are in contact, called the P-N junction. When sunlight strikes the surface of a PV cell, this electrical field provides momentum and direction to light-stimulated electrons, resulting in a flow of current when the cell is connected to an electrical load (Figure 1).

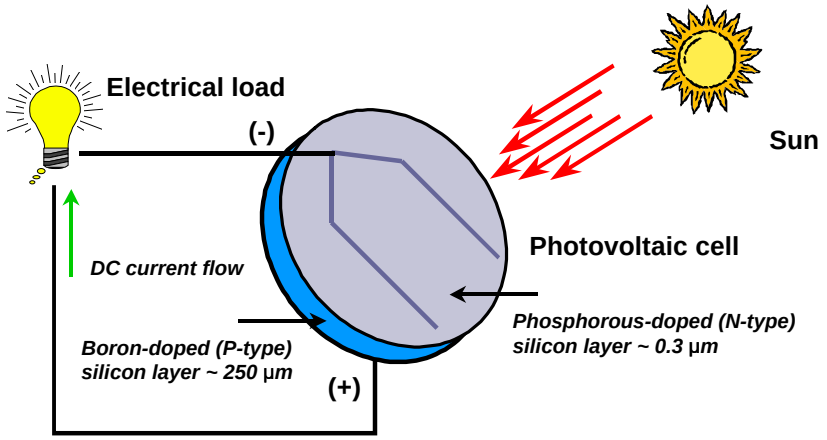

Figure 1. Diagram of photovoltaic cell.

Q. What is the DC electrical output of PV cells?

A. Regardless of size, a typical silicon PV cell produces about 0.5 volt under open-circuit, no-load conditions. The current output of a PV cell depends on its efficiency and size (surface area), and is proportional the intensity of sunlight striking the surface of the cell. For example, under peak sunlight conditions a typical commercial PV cell with a surface area of 160 cm^2 (~25 in^2) will produce about 2 watts peak power. If the sunlight intensity were 40 percent of peak, this cell would produce about 0.8 watts.

Q. How are photovoltaic cells configured to produce usable (greater) amounts of power?

A. *Photovoltaic cells* are connected electrically in series and/or parallel circuits to produce higher voltages and/or currents. *Photovoltaic modules* consist of PV cell circuits sealed in an environmentally protective laminate, and are the fundamental building block of the complete photovoltaic generating unit. *Photovoltaic panels* include more than one PV module assembled as a pre-wired, field-installable unit. A *photovoltaic array* is the complete power-generating unit, consisting of any number of PV modules and panels (Figure 2).

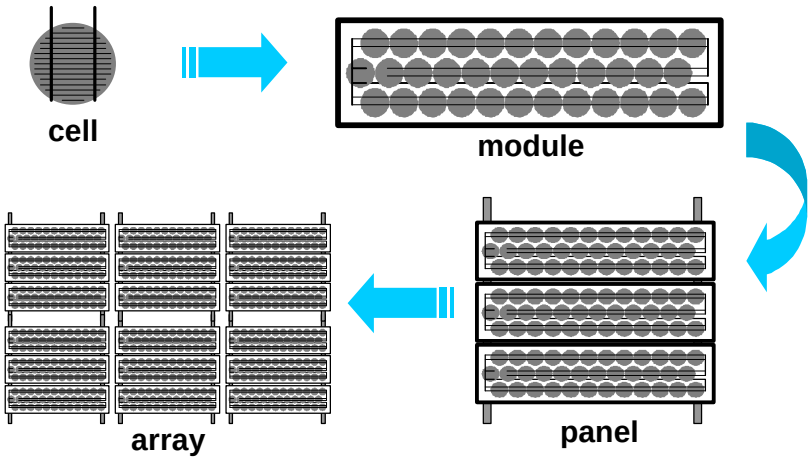

Figure 2. Photovoltaic cells, modules, panels and arrays.

Q. How are photovoltaic cells manufactured?

A. The process of fabricating conventional silicon PV cells begins with 99.999 percent pure semiconductor-grade polysilicon - a material processed from quartz. The polysilicon is then heated to melting temperature, and trace amounts of boron are added to the melt to create a P-type semiconductor material. Next, an ingot, or block of silicon is formed, commonly using one of two methods: 1) by growing a pure crystalline silicon ingot from a seed crystal drawn from the molten polysilicon or 2) by casting the molten polysilicon in a block, creating a polycrystalline silicon material. Individual wafers are then sliced from the ingots using wire saws and then subjected to a surface etching process. After the wafers are cleaned, they are placed in a phosphorus diffusion furnace, creating a thin N-type semiconductor layer around the entire outer surface of the cell. Next, an anti-reflective coating is applied to the top surface of the cell, and electrical contacts are imprinted on the top (negative) surface of the cell. An aluminized conductive material is deposited on the back (positive) surface of each cell, restoring the P-type properties of the back surface by displacing the diffused phosphorus layer. Each cell is then electrically tested, sorted based on current output, and electrically connected to other cells to form cell circuits for assembly in PV modules.

Q. What are thin-film photovoltaic modules?

A. Thin-film photovoltaic modules are manufactured by depositing ultra-thin layers of semiconductor material on a glass or thin stainless-steel substrate in a vacuum chamber. A laser scribing process is used to separate and weld the electrical connections between individual cells in a module. While still a developing technology, thin-film photovoltaic materials offer great promise for reducing the materials requirements and manufacturing costs for PV modules.

Q. How is the electrical performance of photovoltaic modules and arrays typically rated?

A. Photovoltaic modules and arrays are generally rated according to their maximum DC power output under Standard Test Conditions (STC). Standard Test Conditions are defined by a module operating temperature of 25 ^{o}C, an incident solar irradiance level of 1000 W/m^2 and under Air Mass 1.5 spectral distribution. Since these conditions are not typical of how PV modules and arrays operate in the field, actual performance is somewhat less than at STC.

Q. How reliable are photovoltaic modules and what is their useful lifetime?

A. Photovoltaic modules that meet IEEE 1262 or equivalent qualification test standard are extremely reliable products with projected service lifetimes of 20 to 30 years. Some major manufacturers offer module warranties of twenty or more years for maintaining a certain percentage of initial rated power output. Look for the qualification test and warranty information in module manufacturer's specifications.

Q. How much do photovoltaic modules cost, and on what basis is price determined?

A. Like anything else, market drives the cost of PV modules, and to some extent depends on the quality of the product and the quantity purchased. The price of PV modules is generally based on the amount per peak rated power output ($/W$_{peak}$) at STC. Typical costs for photovoltaic modules vary between about $4 and $10 per peak watt, depending on the size and quantity of modules purchased. For example, a 75-watt PV module priced at $6 per peak watt would cost $450. Contact a PV equipment distributor or system integrator for current prices on specific modules.

Q. What should be considered when selecting and purchasing PV modules?

A. Any number of considerations may be applied to the selection and purchase of PV modules, including but not limited to cost per peak rated power output ($/W$_{peak}$), warranty, reliability testing, safety listing, electrical properties, physical characteristics and reputation of manufacturer.

3. Photovoltaic Systems and Equipment

Q. What are common applications for photovoltaic systems?

A. Photovoltaic cells were first developed in the late 1950s to provide power to earth-orbiting satellites. As the technology improved and costs became more reasonable, photovoltaics were used in terrestrial applications to power a number of remote, off-grid critical electrical requirements such as railway signals, telecommunications repeaters, lighting and cathodic protection systems. In the 1980s, photovoltaics became a popular power source for consumer electronic devices, including calculators, watches, radios and other small battery charging applications. As manufacturing levels for photovoltaics continued to grow throughout the 1980s, PV systems were used for a variety of off-grid applications, including water pumping, rural residential and transportation safety systems. Today, a major international market for photovoltaics is providing power to the billions of people throughout the world who live without electrical service, for applications such as health care facilities, community centers, water delivery and purification systems, and rural residences. In industrialized nations, grid-connected PV system applications are now being deployed in great numbers, for residential, commercial and utility grid-support applications.

Q. What are the merits of photovoltaic systems?

A. Photovoltaic systems have a number of merits and unique advantages over conventional power-generating technologies. PV systems can be designed for a variety of applications and operational requirements, and are modular, easily expandable and even transportable in some cases. Energy independence and environmental compatibility are two attractive features of PV systems. PV systems can be used for either centralized or distributed power generation. The fuel (sunlight) is free, and no noise or pollution is created from operating PV systems. In general, PV systems that are well designed and properly installed require minimal maintenance, have long service lifetimes and are very reliable.

Q. What are the limitations of photovoltaic systems?

A. As a developing technology, PV systems have high initial costs and consequently their economic value is evaluated over many years. Due to the diffuse nature of sunlight and the current sunlight to electrical energy conversion efficiencies of photovoltaic devices, surface area requirements for PV array installations are on the order of 8 to 12 m^2 (86 to 129 ft^2) per kilowatt of installed peak DC-rated PV array capacity.

Q. What are the major components in a photovoltaic system?

A. In addition to an array of photovoltaic modules, a number of other components are required in any PV system to conduct, control, convert, distribute, and store the energy produced by the array. The specific components required depends on the functional and operational requirements for the system, and may include major components such as a *DC-AC power inverter*, *battery bank*, system and battery *controller*, auxiliary energy sources and sometimes the specified *electrical load* (appliances). In addition, an assortment of *balance of system (BOS)* hardware, including wiring, terminations, overcurrent, surge protection and disconnect devices, and other power processing equipment. Figure 3 show a basic diagram of a photovoltaic system and the relationship of individual components.

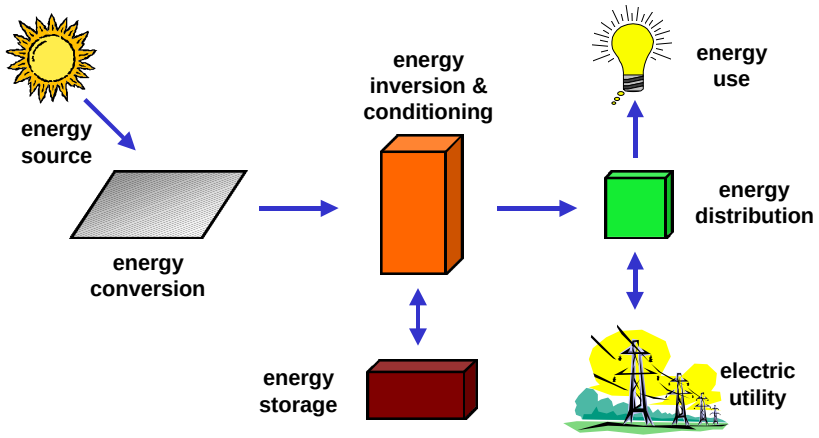

Figure 3. Photovoltaic system components.

Q. How are types of photovoltaic systems classified?

A. Photovoltaic power systems are generally classified according to their functional and operational requirements, their component configurations, and how the equipment is connected to other power sources and/or electrical loads (appliances). Two principle classifications are *grid-connected or utility-interactive systems* and *stand-alone systems*. Photovoltaic systems can be designed to provide DC and/or AC power service, can operate interconnected with or independent of the utility grid, and can be connected with other energy sources or energy storage systems.

Q. What are grid-connected or utility-interactive photovoltaic systems?

A. *Grid-connected* or *utility-interactive* PV systems are designed to operate interconnected with the electric utility grid. The primary component in grid-connected PV systems is the *inverter*, or *power conditioning unit* (PCU). A bi-directional interface is made between the PV system output circuits and the electric utility network, typically at an on-site distribution panel or service entrance. This allows the AC power produced by the PV system to either supply on-site electrical loads, or to back feed the grid when the PV system output is greater than the on-site load demand. At night and during other periods when the electrical loads are greater than the PV system output, the balance of power required by the loads is received from the electric utility. The PCU converts the DC power produced by the PV array into AC power consistent with the requirements of the utility grid, and automatically stops supplying power to the grid when the utility grid is not energized. This safety feature is required in all grid-connected PV systems, and ensures that the PV system will not continue to operate and feed back onto the utility grid when the grid is down for service or repair.

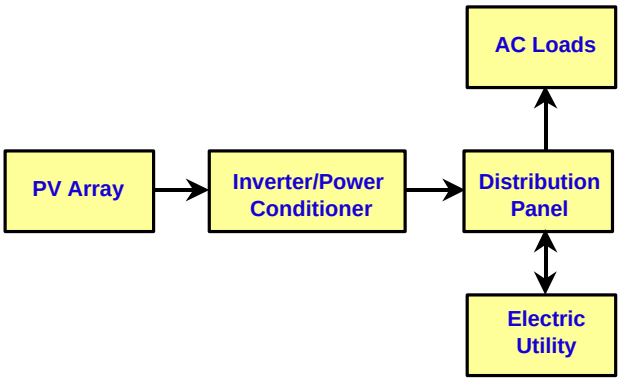

Figure 4. Diagram of grid-connected photovoltaic system.

Q. What are stand-alone photovoltaic systems?

Stand-alone PV systems are designed to operate independent of the electric utility grid, and sized to supply certain DC and/or AC electrical loads. These types of systems may be powered by a PV array only, or may use wind, an engine-generator or utility power as an auxiliary power source in what is called a *PV-hybrid system*. Batteries are used in most stand-alone PV systems for energy storage. Figure 5 shows a diagram of a typical stand-alone PV system powering DC and AC loads. Figure 6 shows how a typical PV hybrid system might be configured.

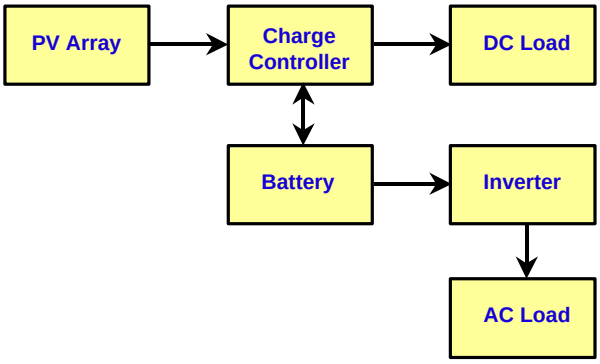

Figure 5. Diagram of stand-alone PV system with battery storage powering DC and AC loads.

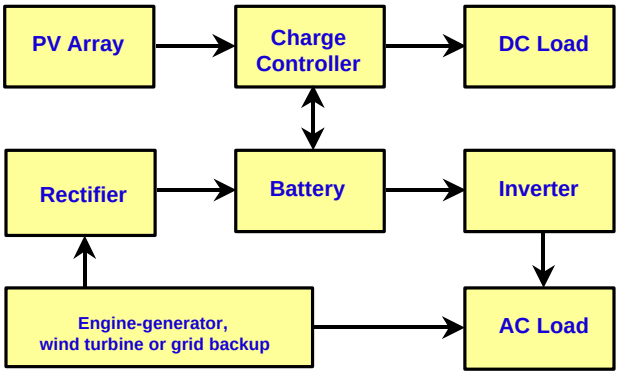

Figure 6. Diagram of photovoltaic hybrid system.

Q. What is a direct-coupled stand-alone photovoltaic system?

A. The simplest type of stand-alone PV system is a *direct-coupled system*, where the DC output of a PV module or array is directly connected to a DC load (Figure 7). Since there is no electrical energy storage (batteries) in direct-coupled systems, the load only operates during sunlight hours, making these designs suitable for common applications such as ventilation fans, water pumps, and small circulation pumps for solar thermal water heating systems. Matching the impedance of the electrical load to the maximum power output of the PV array is a critical part of designing well-performing direct-coupled system. For certain loads such as positive-displacement water pumps, a type of electronic DC-DC converter, called a *maximum power point tracker (MPPT)* is used between the array and load to help better utilize the available array maximum power output.

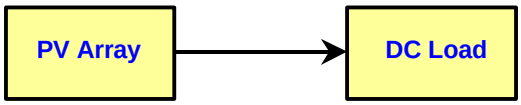

Figure 7. Direct-coupled PV system.

Q. Why are batteries used in stand-alone photovoltaic systems?

A. Batteries are often used in PV systems for the purpose of storing energy produced by the PV array during the day, and to supply it to electrical loads as needed (during the night and periods of cloudy weather). Other reasons batteries are used in PV systems are to operate the PV array near its *maximum power point*, to power electrical loads at stable voltages, and to supply surge currents to electrical loads. In most cases, *a battery charge controller* is used in these systems to protect the battery from overcharge and overdischarge (Figure 5).

Q. Can photovoltaic systems operate normally in grid-connected mode, and still operate critical loads when utility service is disrupted?

A. Yes, however battery storage must be used. This type of system is extremely popular for homeowners and small businesses where critical backup power supply is required for critical loads such as refrigeration, water pumps, lighting and other necessities. Under normal circumstances, the system operates in grid-connected mode, serving the on-site loads or sending excess power back onto the grid while keeping the battery fully charged. In the event the grid becomes de-energized, control circuitry in the inverter opens the connection with the utility through a *bus transfer mechanism*, and operates the inverter from the battery to supply power to the dedicated loads only. In this configuration, the critical loads must be supplied from a dedicated sub panel. Figure 8 shows how a PV system might be configured to operate normally in grid-connected mode and also power critical loads from a battery bank when the grid is de-energized.

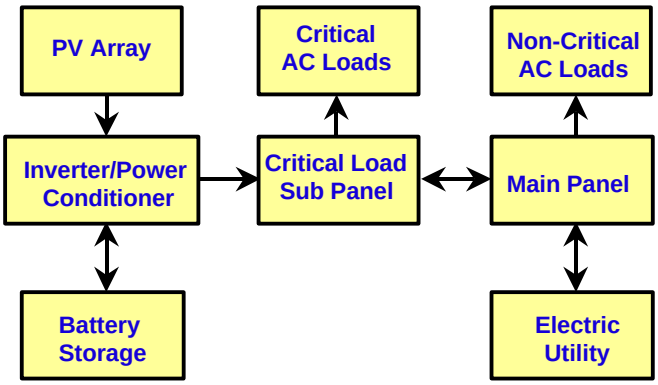

Figure 8. Diagram of grid-connected critical power supply system.

4. Planning a Photovoltaic System Installation

Q. What businesses offer photovoltaic equipment, system design and installation services?

A. A number of companies in Florida, throughout the U.S. and internationally offer PV system equipment, system design and installation services. Contact information for many of these businesses can be found in directory listings at the Web sites listed below:

- Florida Solar Energy Center: Photovoltaics Program - http://www.fsec.ucf.edu/~pv/
- Florida Solar Energy Industries Association (FLASEIA) - http://www.flaseia.org/
- Solar Energy Industries Association (SEIA) - http://www.seia.org/
- U.S. Department of Energy PV Program: Industry Directory - http://www.eren.doe.gov/pv/pvdirectory.html
- The Source for Renewable Energy - http://www.sourceguides.com/energy/
- Center for Renewable Energy and Sustainable Technology (CREST): Solstice - http://solstice.crest.org/
- James & James: World Directory of Renewable Energy Suppliers and Services - http://www.jxj.com/dir/wdress/
- Gridwatch Global Power Directory - http://www.gridwatch.com/

Q. Who should be contacted when preparing for a PV system installation?

A. Photovoltaic system installations should be inspected and approved by the Authority Having Jurisdiction (AHJ), and in most cases permits and approvals to proceed with the installation are required. The local electrical (and building) inspectors should be contacted well in advance of the planned installation to review the proposed electrical system design and mechanical layout. This is the opportunity to identify any additional constraints or requirements involved with installing and commissioning the system.

Q. Does the local electric utility need to be contacted regarding a PV system installation?

A. Yes, if the planned system uses a utility-interactive inverter and a bi-directional interface with the electrical distribution network will allow the PV system to feed power onto the grid. In most cases, the utility will require some sort of interconnection and liability agreement with the electric service customer, and advance planning is important to ensure ample time for completing the interconnection requirements. Photovoltaic power systems operating independently of the electric utility grid, or using the grid only to operate battery chargers or to supply backup power to the PV system do not typically require involvement from the electric utility.

Q. Who is permitted to install photovoltaic power systems?

A. In general, it is highly advisable to have qualified, licensed electricians or solar contractors install PV systems. In Florida, the Construction Industry Licensing Board (CILB) certifies a number of building trades persons, including solar contractors. Any PV system designer, equipment manufacturer, or installer should have thorough knowledge of electrical codes and a full understanding of engineering principles and hazards associated with electrical and photovoltaic power systems.

Q. What are industry standards for photovoltaic system equipment and installations?

A. A number of existing and pending codes and standards govern the installation of PV systems and equipment. In most cases, the applicable standard for photovoltaic systems is the *National Electrical Code (NEC)*, published every three years by the *National Fire Protection Association*. Article 690 of the NEC deals specifically with PV system installations, as well as a number of other articles covering wiring methods, overcurrent protection and disconnect provisions, grounding, and other issues. PV system installations will generally have to be inspected according to the requirements of the NEC, and inspectors will generally look to see that listed equipment is used. *Underwriter's Laboratory (UL)* is one of a few organizations that provide safety listings for photovoltaic equipment. The *Institute of Electrical and Electronics Engineers (IEEE)* also publishes a number of standards, recommended practices and guidelines for photovoltaic systems and equipment, including IEEE 929 which outlines the basic operational and safety requirements for grid-connected photovoltaic systems.

Q. Are photovoltaic arrays safe to install on residential rooftops?

A. Yes, as long as the modules are listed according to Underwriters Laboratory UL1703 or equivalent listing and are connected to a PV-specific ground-fault detection and disablement device. Listed modules will have the UL or equivalent listing displayed on the module label. Many photovoltaic inverters and power distribution centers include array ground-fault protection devices.

Q. What are considerations for installing PV arrays on rooftops?

A. In general, where available roof space and surface orientations permit, PV arrays should be installed in a standoff configuration, above and parallel to the roof surface. Where acceptable array orientation can not be achieved by this method or the array is to be installed on a flat rooftop, a rack-type mounting system that tilts the array with respect to the roof surface may be used. However, the structural loads on the building are generally higher for these types of array installations. In all cases, the rooftop array support assemblies must be securely attached to the roof structural members. Fastening array support structures directly to plywood or other roof decking materials is unacceptable, and will typically not meet building codes. Weather sealing of any roof penetration is also an important consideration as well as the age of the roofing shingles or other covering. Due to the difficulties in removing PV arrays for re-roofing, some do not recommended installing PV arrays on roofs that are older than 5 years. Contact a building code official to determine if a building permit is required for a rooftop PV array installation.

5. Site Survey and Resource Assessment

Q. How should a PV array be oriented for maximum energy production?

A. As a general rule, the maximum annual energy production from a fixed-mounted, non-tracking PV array will be achieved when the array is facing due south (in the northern hemisphere) and tilted at an angle from horizontal equal to 90 percent of the local latitude. Mechanical, sun-tracking PV arrays can produce from 15 to 40 percent more energy than comparable fixed-mounted arrays. However, the costs and complexity of these devices makes them generally unsuitable for building-integrated applications.

Q. What are the consequences of tilting a PV array at lower or higher angles than the local latitude?

A. When a PV array is tilted at a lower angle than latitude (closer to horizontal) the energy production will typically peak during the summer months when the solar insolation on horizontal surfaces is greater, and will be significantly lower during winter months when the sun is lower in the sky. Conversely, PV arrays tilted at angles higher than latitude will generally have higher energy production during winter months and lower performance during summer months. Where the electrical load to be satisfied by the PV system varies seasonally, array tilt angles are often specified to better match the PV system output with the electrical load requirements.

Q. What are the consequences of orienting a PV array off-azimuth (east or west of due south)?

A. The lower the tilt angle is for a PV array (approaching horizontal), the smaller the reduction in energy production for off-azimuth orientations. Through most of the U.S., PV arrays tilted at latitude and oriented at 45 degrees east or west of due south will produce anywhere between 10 and 25 percent less energy on a daily basis, depending on the location, time of year and local weather patterns. In some cases, for example with PV systems owned and operated by electric utilities, it may be desirable to orient PV arrays west-facing to produce higher peak power output during the summer afternoon peak demand times for the utility. For these applications, the time value of power produced by the PV system is more important than the overall amount of energy produced.

Q. What are suggested limits on orientation and tilt angles for installing PV arrays?

A. In many cases, available unshaded roof area limits the possible locations for installing PV arrays. Suggested orientation limits vary from southwest to southeast (azimuth angles 45 degrees east and west of due south) and tilt angles no more than +/- 15 degrees from latitude.

Q. What are the consequences of shading PV arrays?

A. Shading of PV arrays is extremely detrimental to performance, and should be avoided if at all possible. As a general rule, PV arrays should be installed in such a location that no shading occurs from nearby trees, buildings, power lines and poles or other obstructions between the hours of 9:00 a.m. and 3:00 p.m. solar time at any time of the year.

Q. What affects the amount of solar radiation received on a surface at any given location?

A. The amount of solar energy received on a surface at any given location depends on the altitude, latitude, time of day and year, local weather patterns and atmospheric effects, and orientation of the surface with respect to the sun.

Q. What is the difference between solar irradiance and solar insolation?

A. *Solar irradiance* is an instantaneous quantity describing the rate, or flux of solar radiation (power) incident on a surface, commonly expressed in units of kilowatts per square meter (kW/m^2). Outside the earth's atmosphere, the solar irradiance on a surface oriented normal (perpendicular) to the sun's rays is essentially constant at 1.36 kW/m^2. Due to atmospheric effects, the peak solar irradiance incident on a terrestrial surface oriented normal to the sun, at noon on a clear day is on the order of 1 kW/m^2. A solar irradiance level of 1 kW/m^2 is often called *peak sun* and is the reference condition commonly used to rate the peak electrical output of photovoltaic modules and arrays.

Solar insolation is an amount of solar energy received on a surface commonly expressed in units of kilowatt-hours per square meter (kWh/m^2). Solar insolation (energy) is essentially the average solar irradiance (power), integrated with respect to time. When solar insolation data is represented on an average daily basis, the value is often called *peak sun hours (PSH)*, and can be thought of as the number of equivalent hours per day that solar irradiance is at its peak level of 1 kW/m^2. The worldwide average daily value of solar insolation on optimally oriented surfaces is approximately 5 kWh/m^2, or 5 PSH. Figure 9 shows the relationship between solar irradiance and insolation.

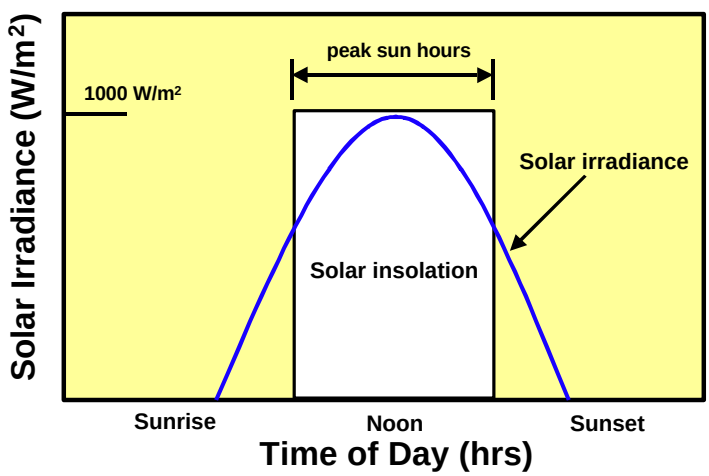

Figure 9. Relationship between solar irradiance and insolation.

Q. Where is solar radiation data available?

A. *Solar energy or insolation data* has been collected at a number of sites throughout the world, and is published for use by photovoltaic and solar thermal system designers by the National Renewable Energy Laboratory, World Meteorological Organization and other organizations. Extensive solar radiation databases can be accessed from the Internet sites listed as follows:

- National Renewable Energy Laboratory: Solar Radiation Data Manual for Flat-Plate and Concentrating Collectors - http://rredc.nrel.gov/solar/pubs/redbook/
- U. S. Department of Energy's Resource Assessment Program: Renewable Resource Data Center (RReDC) - http://asd.nrel.gov/
- World Radiation Data Centre - http://wrdc-mgo.nrel.gov/
- Center for Renewable Energy and Sustainable Technology: http://solstice.crest.org/renewables/solrad/

6. Performance Expectations for Photovoltaic Systems

Q. How much surface area is required for PV array installations?

A. The physical size of a PV array is directly related to its maximum power rating at STC and the overall sunlight to electric power conversion efficiency of the modules and array. The surface area requirements for PV array installations are on the order of 8 to 12 m^2 (86 to 129 ft^2) per kilowatt of installed peak DC-rated PV array capacity, depending on the overall sunlight to electrical power conversion efficiency of the module and array. For example, a 10 percent efficient PV array with a 4-kW_{peak} DC-rated output at STC would require approximately 40 m^2 (430 ft^2) of array surface area.

The sizing of PV systems is based on the amount of energy to be produced, or the amount of energy required by electrical loads. The size and cost of any PV system is directly related to the amount of energy it supplies, as well as the amount of solar insolation received on the array surface. For example, a given system installed in the Southwestern U.S. would produce more energy than a similar system installed in the Northeastern U.S.

Q. How are grid-connected photovoltaic systems sized?

A. For many grid-connected PV system applications, the size of the PV array is typically based on what physical size can be installed on a rooftop, or how much the customer can afford to spend. In other cases, these systems may be designed to produce a certain amount of energy on a daily average or annual basis (e.g., to offset certain loads), and the corresponding array size is based on the local solar insolation. Where these systems are also used to provide backup power to critical electrical loads and use a battery, the array and battery are often sized based on meeting these loads as in typical stand-alone PV systems.

Q. What peak power and energy performance can be expected from a grid-connected photovoltaic system?

A. The energy performance of a grid-connected PV system is based on the size (peak power rating) of the PV array, associated reductions in performance at actual operating conditions, efficiencies of the inverter and power processing equipment, and the amount of solar insolation received on the array surface. In general, the AC peak power output of these systems is about 65 to 75 percent of the DC-rated peak power output of the array at STC. Table 1 gives a simple worksheet and example of how the energy performance of a typical 2 kW_{peak} grid-connected PV system can be estimated.

Table 1. Estimating the Performance of Grid-Connected PV Systems

A1	**PV Array Maximum DC-Rated Power Output at STC - (kWpeak)**	**2**
A2	**Array Overall Area Efficiency at STC (9 – 12%)**	**0.10**
A3	**Array Surface Area Requirement = A1 / A2 - (m^2 / ft^2)**	**20 m^2 / 215 ft^2**
A4	**Array Performance at Operating Temperature (80% of STC for warm climates, 90% of STC for temperate climates)**	**0.85**
A5	**DC-AC Energy Conversion Efficiency (80 – 90%)**	**0.85**
A6	**Derate for Other System Losses (92 – 96% of STC rating)**	**0.95**
A7	**Estimated Peak AC Power Output = A1 x A4 x A5 x A6 - (AC kW_{peak})**	**1.37**
A8	**Average Daily Solar Insolation in Plane of Array (kWh/m^2)**	**5**
A9	**Estimated Average Daily AC Energy Output = A7 x A8 - (AC kWh)**	**6.9**

Q. How are stand-alone photovoltaic systems sized?

For most stand-alone photovoltaic systems, the sizing of the array is generally based on meeting the electrical loads during the month with the lowest average daily solar insolation on the array surface (usually during winter months for constant loads), plus inefficiencies in charging and discharging the battery. The battery bank is sized for a number of days of storage, or *autonomy period* to satisfy the electrical loads during periods of below average solar insolation. Where auxiliary sources of energy are used in addition to the array as in PV hybrid systems, the PV array (and battery) can be sized smaller depending on the expected contributions from the other sources. Steps involved in sizing stand-alone PV systems include:

- Determining the magnitude and duration of all electrical loads, and the resulting average daily energy use
- Sizing the battery storage capacity based on the average daily load, desired days of autonomy, and depth of discharge limit
- Sizing the PV array to meet the load during the period with the highest load and lowest solar insolation
- Determining the size of charge controller and electrical BOS components

7. System Commissioning, Inspection and Operation

Q. What documentation and information should be included as part of a complete photovoltaic system installation package?

A. A complete PV system design package consists of not only the installed equipment but a complete supporting documentation package as well. A complete documentation package is an essential part of ensuring the safe and reliable long-term performance of any PV system installation. At a minimum, this documentation should include: system specifications, electrical schematics and mechanical drawings, parts, materials and source lists. Documentation should include installation and checkout procedures, user/operator training for operation, maintenance, troubleshooting and tools and equipment required to perform these tasks.

Q. What are typical maintenance requirements for PV systems?

A. Depending on the type of system design and equipment used, the maintenance requirements for PV installations vary. Some systems may require little maintenance and only annual inspections, while others, particularly those using batteries may require maintenance intervals as frequent as 4 to 6 months, as well as periodic replacement over the lifetime of the system. Examples of typical maintenance items that photovoltaic systems may require are:

- Inspection of wiring connections and terminations for tightness and corrosion
- Inspect to ensure that wiring harnesses are neatly bundled and protected
- Inspection of PV array for cleanliness, damage and structural integrity
- Inspection of any roof penetrations and weather sealing
- Replacement and maintenance for batteries, including cleaning, adding electrolyte and equalizing charging, where applicable.

Q. What are common problem areas associated with the installation of photovoltaic systems that are sometimes found during inspections?

A. Although most PV systems installed by qualified and reputable individuals are generally done in a safe and reliable manner, having solar electric power systems installed by untrained persons can lead to problems. Some common problems associated with the design, installation and operation of photovoltaic systems are:

- Extensive shading of the PV array
- Insecure structural attachment of PV arrays to rooftops and other structures (e.g., attachment of roof mounts directly to roof decking)
- Inadequate weather sealing for array mount roof and other penetrations
- Unsafe wiring methods
- Unsafe installation, improper use and maintenance for batteries
- Insufficient conductor ampacity and insulation type
- Use of unlisted equipment or improper application of listed equipment
- Lack of or improper placement of overcurrent protection and disconnect devices
- Lack of or improper system grounding
- Lack of or inadequate labeling on major system components and disconnect devices
- Lack of or inadequate documentation on system design, and operating and maintenance requirements
- Lack of or inadequate environmental protection for certain system components